SILCA NEWS

ALL THE NEW KEYS, AUTOMOTIVE SOLUTIONS, KEY CUTTING MACHINES, SOFTWARE UPDATES AND MUCH MORE

2023 MAY | NR. 05

World First!

Renault* Dacia, Kia*, Hyundai
Cloning Solution

NETWORK WITH US

MYKEYS Pro

SILCA NEWS

NEW KEYS

2023 MAY | NR. 05

Silca key blanks are compatible with third party manufacturers' cylinders specified here below:

ABUS*

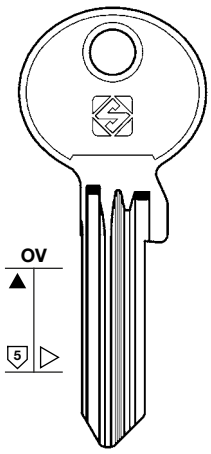

AB36X

8 052782 032856

Box of 50

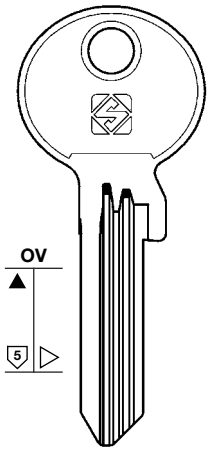

AB36RX

8 052782 032849

Box of 50

ASSA*

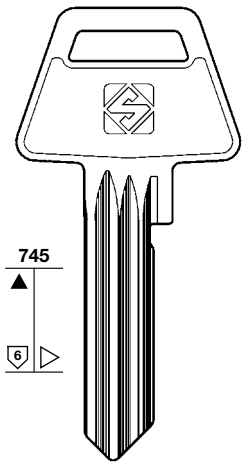

ASS184R

8 052782 033266

Box of 50

BAB*

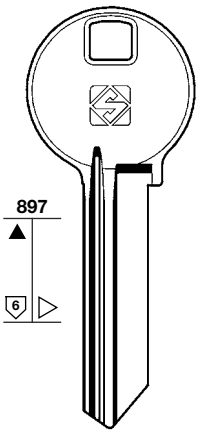

BAB35-PS

8 003737 863582

Box of 50

BAB*

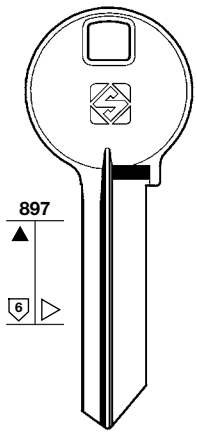

BAB35R-PS

8 003737 863599

Box of 50

BODA*

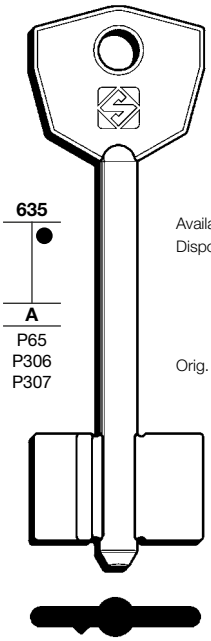

Available in **brass**
Disponibile in **ottone**

Orig. code:
428

5BDA1

8 052782 029672

Box of 25

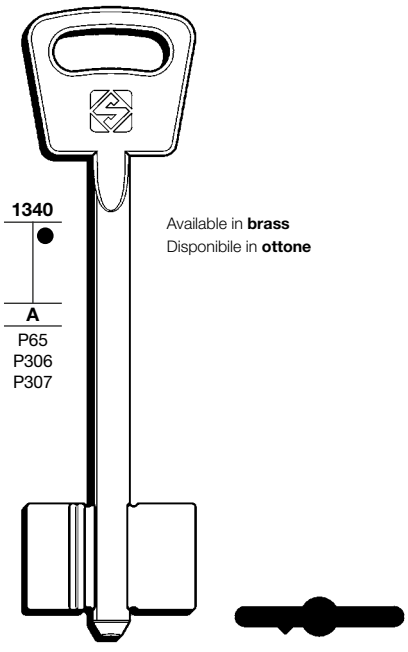

Available in **brass**
Disponibile in **ottone**

5BDA7

8 052782 029672

Box of 25

ABUS* (DE)

ASSA* (SE)

BAB* (DE)

BODA* (FI)

(*) This is a trademark of a third party not affiliated nor linked with Silca S.p.A. or the dormakaba Group. Silca S.p.A. and dormakaba Group do not own any intellectual property right nor have been granted any license with regard to such trademark, which is hereby used only to indicate the intended purpose of Silca's products.

ALL THE KEYS DISPLAYED ARE AVAILABLE ALSO IN THE SILCA **"NEW KEY COLLECTION"**

> More info at mykeyspro.com

Copyright by Silca S.p.A. 2023 - All Rights Reserved

Silca key blanks are compatible with third party manufacturers' cylinders specified here below:

BKS*

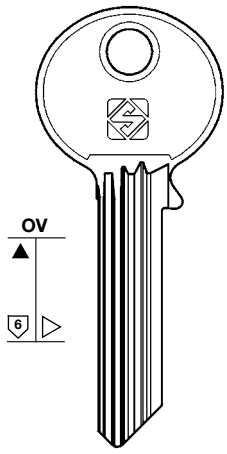

BK6-PS

1000 Serie

8 052782 010212

Box of 50

CES*

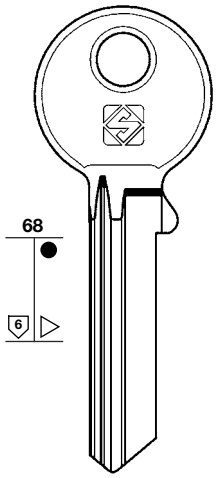

CE14RPS

8 052782 032863

Box of 50

CORBIN*

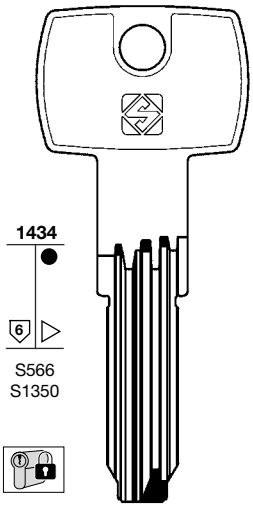

Shoulder milling view

Lock Systems:
Eurostar,
Corbin Two,
Ifam F11SX

CB97SMD

8 052782 032917

Box of 50

DOM*

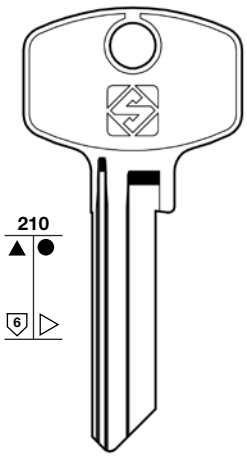

DM100

8 003736 785793

Box of 50

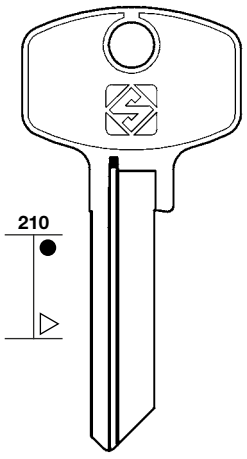

DM100R

8 003736 785861

Box of 50

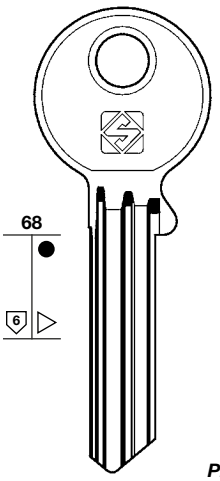

DM126

8 003737 834940

Box of 50

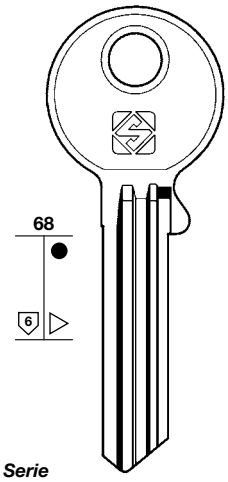

PP1024 Serie

DM126R

8 003736 495319

Box of 100

BKS* (DE)

CES* (DE)

CORBIN* (IT)

DOM* (DE)

(*) This is a trademark of a third party not affiliated nor linked with Silca S.p.A. or the dormakaba Group. Silca S.p.A. and dormakaba Group do not own any intellectual property right nor have been granted any license with regard to such trademark, which is hereby used only to indicate the intended purpose of Silca's products.

ALL THE KEYS DISPLAYED ARE AVAILABLE ALSO IN THE SILCA **"NEW KEY COLLECTION"**

> More info at mykeyspro.com

Copyright by Silca S.p.A. 2023 - All Rights Reserved

Silca key blanks are compatible with third party manufacturers' cylinders specified here below:

DOM*

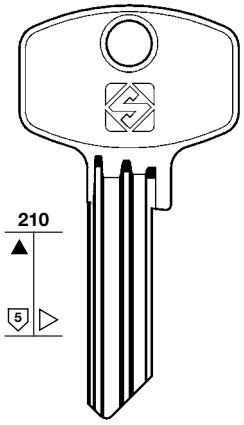

DM143

8 003737 852609

Box of 50

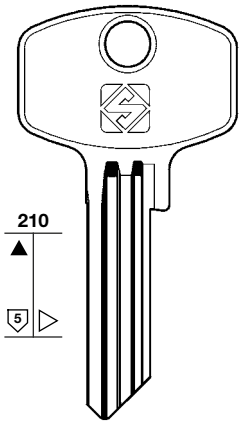

DM143R

PP1024 Serie

8 003737 835176

Box of 50

EVVA*

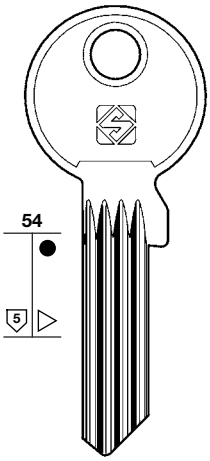

EV104X

GPI Serie

8 003737 858403

Box of 50

GIVI*

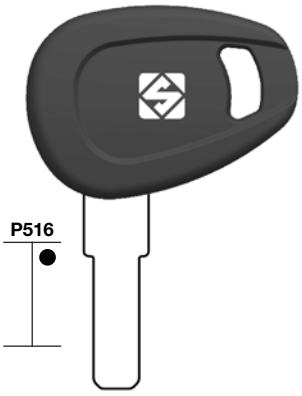

GIV1P

8 052782 033587

Box of 25

HYUNDAI*

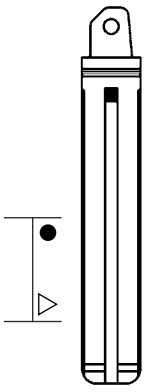

HYN20T

8 052782 034720

Box of 50

KESO*

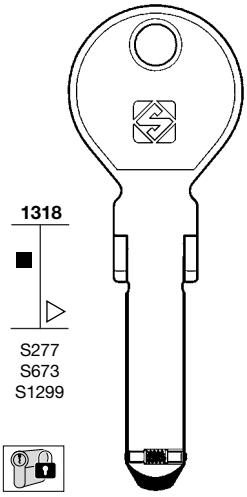

Lock Systems:
2000S Omega,
2000S Omega
(step-drilling)

KE19SM2

Shoulder milling view

8 052782 032962

Box of 50

- **DOM*** (DE)
- **EVVA*** (AT)
- **GIVI*** (IT)
- **HYUNDAI*** (KR)
- **KESO*** (CH)

(*) This is a trademark of a third party not affiliated nor linked with Silca S.p.A. or the dormakaba Group. Silca S.p.A. and dormakaba Group do not own any intellectual property right nor have been granted any license with regard to such trademark, which is hereby used only to indicate the intended purpose of Silca's products.

ALL THE KEYS DISPLAYED ARE AVAILABLE ALSO IN THE SILCA **"NEW KEY COLLECTION"**

> More info at mykeyspro.com

Copyright by Silca S.p.A. 2023 - All Rights Reserved

Silca key blanks are compatible with third party manufacturers' cylinders specified here below:

KESO*

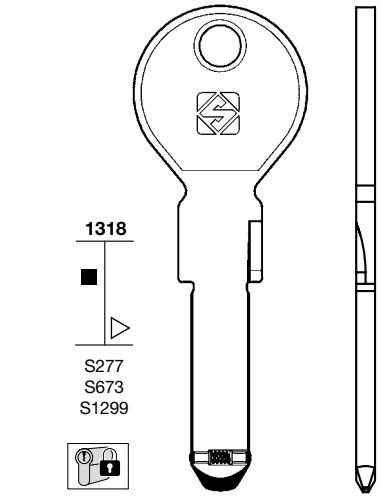

Lock Systems:
2000S Omega,
2000S Omega
(step-drilling)

Shoulder milling view

KE19SMD

8 052782 032979
Box of 50

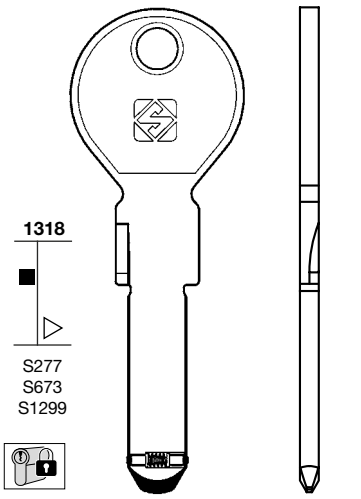

Lock Systems:
2000S Omega,
2000S Omega
(step-drilling)

Shoulder milling view

KE19SMS

8 052782 032955
Box of 50

KESO*

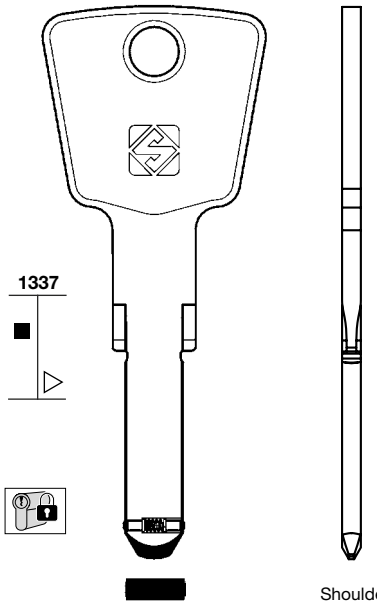

Shoulder milling view

KE20SM2

8 052782 032986
Box of 50

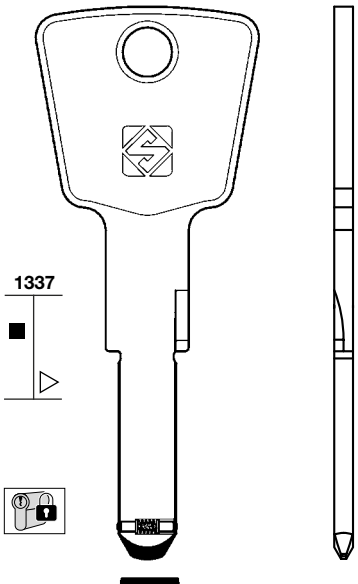

Shoulder milling view

KE20SMD

8 052782 032993
Box of 50

KESO*(CH)

(*) This is a trademark of a third party not affiliated nor linked with Silca S.p.A. or the dormakaba Group. Silca S.p.A. and dormakaba Group do not own any intellectual property right nor have been granted any license with regard to such trademark, which is hereby used only to indicate the intended purpose of Silca's products.

ALL THE KEYS DISPLAYED ARE AVAILABLE ALSO IN THE SILCA **"NEW KEY COLLECTION"**

> More info at mykeyspro.com

Copyright by Silca S.p.A. 2023 - All Rights Reserved

Silca key blanks are compatible with third party manufacturers' cylinders specified here below:

KESO*

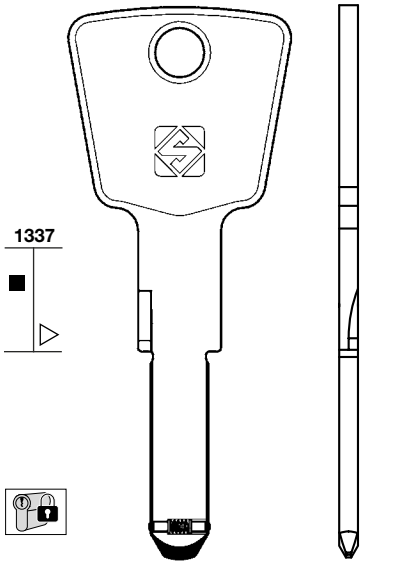

KE20SMS

8 052782 033105
Box of 50

MLM*

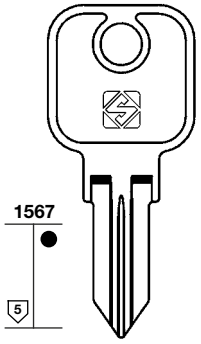

MLM14

FEBRU

8 052782 032870
Box of 50

TOK-WINKHAUS*

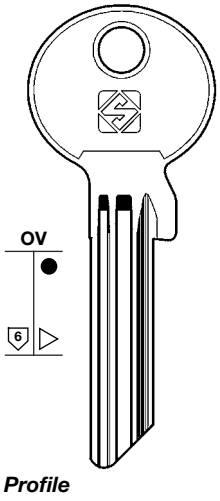

TO126X

8 003737 835282
Box of 50

TOK-WINKHAUS*

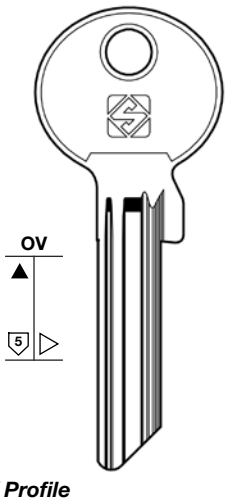

TO126RX

8 003737 835282
Box of 50

ULTION*

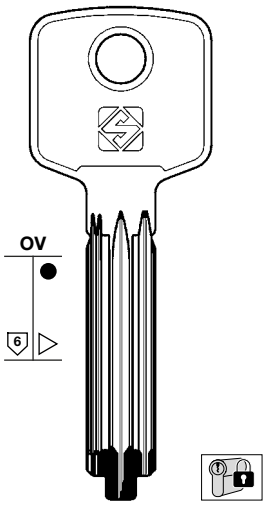

ULT1

8 052782 027630
Box of 50

YALE*

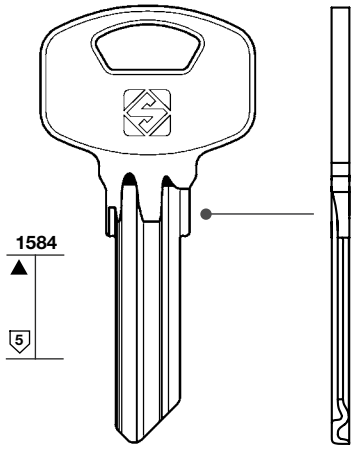

Lock System:
Yale CY2T

YA89SM

8 052782 032887
Box of 50

KESO* (CH)

MLM* (DE)

TOK-WINKHAUS* (DE)

ULTION* (EN)

(*) This is a trademark of a third party not affiliated nor linked with Silca S.p.A. or the dormakaba Group. Silca S.p.A. and dormakaba Group do not own any intellectual property right nor have been granted any license with regard to such trademark, which is hereby used only to indicate the intended purpose of Silca's products.

ALL THE KEYS DISPLAYED ARE AVAILABLE ALSO IN THE SILCA **"NEW KEY COLLECTION"**

> More info at mykeyspro.com

Copyright by Silca S.p.A. 2023 - All Rights Reserved

Silca key blanks are compatible with third party manufacturers' cylinders specified here below:

YALE*

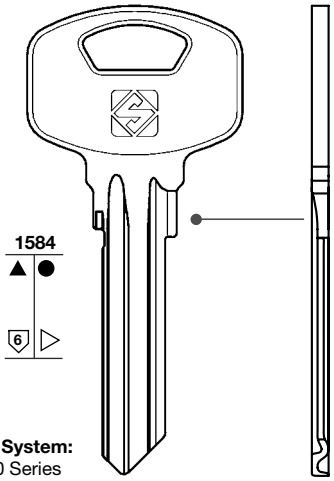

Lock System:
62000 Series

Shoulder milling view

YA91SM

8 052782 033037
Box of 50 - Steel

8 052782 033020
Box of 50 - Brass

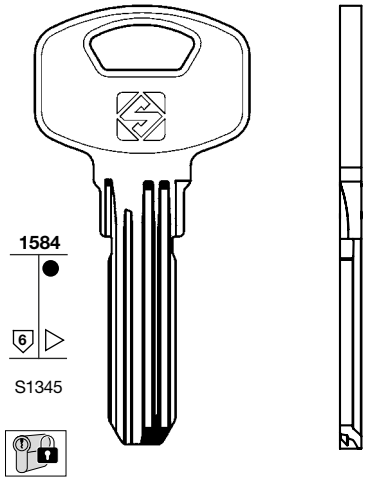

Lock System:
1000 Series

Shoulder milling view

YA94SMD

8 052782 032948
Box of 50

YALE*

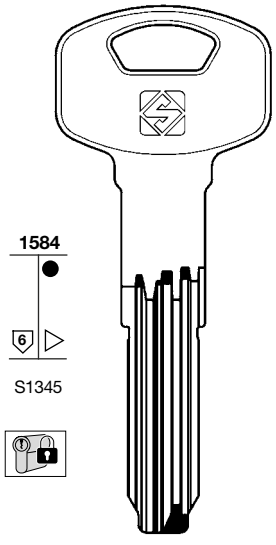

Shoulder milling view

YA115SMD

8 052782 032931
Box of 50

ZEISS-IKON*

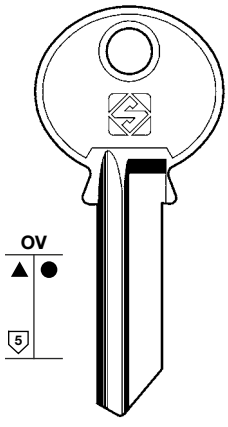

ZE6

8 003736 249356
Box of 50 - Brass

8 003736 574076
Box of 50 - Steel

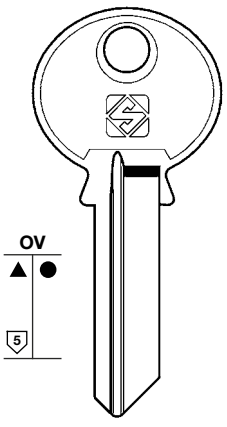

ZE6R

8 003736 249363
Box of 50 - Brass

8 003736 574090
Box of 50 - Steel

YALE* (IT)

ZEISS-IKON* (DE)

(*) This is a trademark of a third party not affiliated nor linked with Silca S.p.A. or the dormakaba Group. Silca S.p.A. and dormakaba Group do not own any intellectual property right nor have been granted any license with regard to such trademark, which is hereby used only to indicate the intended purpose of Silca's products.

ALL THE KEYS DISPLAYED ARE AVAILABLE ALSO IN THE SILCA **"NEW KEY COLLECTION"**

> More info at mykeyspro.com

Copyright by Silca S.p.A. 2023 - All Rights Reserved

SILCA NEWS
AUTOMOTIVE SOLUTIONS
2023
NR. 05

Renault*, Dacia*, Kia*, Hyundai* Cloning Solution

The first worldwide solution for cloning ID49-1E Renault*, Dacia* and latest generation 7K & 6K Kia* Hyundai* models

NEW R-Snoop
For Renault* and Dacia* models, the new R-Snoop is needed to detect data directly from the car immobilizer unit even when using the Smart Aerial+. Cloning Kia* and Hyundai* does not require use of the R-Snoop.

Universal use
The R-Snoop can be used to clone all the applications covered by existing Silca Snoop devices.

Reliable, familiar process
Clone Renault*, Dacia*, Kia* and Hyundai* models with the RW5 or Smart Aerial+ in exactly the same, familiar way you clone other vehicle keys.

Free software update
The solution is available with a free, automatic software update for RW5 and Smart Aerial+.

Fast cloning
The cloning calculation is made via cloud using Silca's powerful, proprietary servers.

Extends capability of the RW5 and Smart Aerial+
The cloning solution is available only with the RW5 and Smart Aerial+ and with the Silca GTI Pro and UTX-S transponders.

Primi al mondo ad offire una soluzione di clonazione sui modelli ID49-1E Renault*, Dacia* e 7K e 6K Kia* Hyundai* di ultima generazione.

Die weltweit erste Lösung zum Klonen von ID49-1E Renault*, Dacia* und Kia* Hyundai* Modellen der neuesten Generation 7K & 6K.

La première solution mondiale de clonage des modèles ID49-1E Renault*, Dacia* et dernière génération 7K & 6K Kia* Hyundai*.

A primeira solução a nível mundial para a clonagem de modelos ID49-1E Renault*, Dacia* e modelos 7K e 6K Kia* Hyundai* de última geração.

La primera solución mundial para clonar modelos ID49-1E Renault*, Dacia* y de última generación 7K & 6K Kia* Hyundai*.

(*) This trademark belongs to third parties not affiliated or connected to Silca S.p.A. or the dormakaba Group. Silca S.p.A. and the dormakaba Group do not possess any intellectual property rights regarding the trademark and have not obtained any licences under it; it is used merely to indicate the destination of use for Silca products.

Copyright by Silca S.p.A. 2023 - All Rights Reserved

SILCA NEWS
AUTOMOTIVE SOLUTIONS
2023
NR. 05

Renault*, Dacia*, Kia*, Hyundai* Cloning Solution

La prima soluzione dedicata alla clonazione dei modelli ID49-1E Renault*, Dacia* e di ultima generazione 7K e 6K Kia* Hyundai*

- NUOVO R-Snoop
- Processo intuitivo
- Aggiornamento software gratuito
- Clonazione veloce
- Estese funzioni di clonazione con RW5 e Smart Aerial+
- La soluzione non copre tutte le tecnologie ID49-1E. Consulta MYKEYS Pro per le informazioni aggiornate

Die weltweit erste Lösung zum Kopieren von ID49-1E Renault*, Dacia* und Kia* Hyundai* Modellen der neuesten Generation 7K & 6K

- NEU R-Snoop
- Zuverlässiger, vertrauter Prozess
- Kostenloses Software-Update
- Schnelles Kopieren
- Erweitert die Möglichkeiten von RW5 und Smart Aerial+
- Für ID49-1E deckt die Lösung nicht alle Technologien ab. Prüfen Sie MYKEYS Pro für aktuelle Informationen

La première solution mondiale de clonage des modèles ID49-1E Renault*, Dacia* et dernière génération 7K & 6K Kia* Hyundai*

- NOUVEAU R-Snoop
- Un processus fiable et connu
- Mise à jour gratuite du logiciel
- Clonage rapide
- Élargit les capacités du RW5 et du Smart Aerial+.
- La couverture ne s'applique pas à tous les véhicules ID49-1E. Consultez MYKEYS Pro pour obtenir des informations actualisées.

A primeira solução a nível mundial para a clonagem de modelos ID49-1E Renault*, Dacia* e modelos 7K e 6K Kia* Hyundai* de última geração

- NOVO R-Snoop
- Processo fiável e familiar
- Actualização gratuita do software
- Clonagem rápida
- Aumenta a capacidade do RW5 e do Smart Aerial+
- Para ID49-1E a solução não abrange todas as tecnologias. Consulte MYKEYS Pro para obter informações actualizadas

La primera solución mundial para clonar modelos ID49-1E Renault*, Dacia* y de última generación 7K & 6K Kia* Hyundai*.

- NUEVO R-Snoop
- Proceso conocido
- Actualización gratuita del software
- Clonación rápida
- Amplía la capacidad de RW5 y Smart Aerial
- Para IDE49-1E la solución no cubre todas las tecnología. Consulte MYKEYS Pro para obtener información actualizada.

MYKEYS Pro

Clone Renault* and Dacia* ID49-1E vehicles using the R-Snoop and the Silca RW5 or Smart Aerial+ with a GTI Pro or UTX-S transponder

ID49-1E applications**

Brand	Model	From	To
Dacia*	Duster	2013	2016
Dacia*	Lodgy	2012	2015
Dacia*	Sandero	2012	2015
Renault*	Trafic	2014	2015
Renault*	Capture	2012	2015
Renault*	Clio IV	2012	2015
Renault*	Twingo 3	2014	2015
Smart*	Forfour	2014	2016
Smart*	Fortwo	2014	2016

** Not all vehicle systems covered

ID7K applications

Brand	Model	From	To
Kia*	Cerato	2019 -->	
Kia*	Forte	2019 -->	
Kia*	Ceed	2013 -->	
Kia*	Xceed	2020 -->	
Kia*	Soul	2019 -->	
Kia*	Mohave	2020 -->	
Kia*	Borrengo	2020 -->	
Kia*	K3	2018 -->	
Hyundai*	Sonata	2020 -->	

ID6K applications

Brand	Model	From	To
Hyundai*	I30	2020	2022
Hyundai*	Iload	2020 -->	
Hyundai*	Kona	2020 -->	
Hyundai*	Venue	2020 -->	
Hyundai*	Tucson	2020	2021
Kia*	Rio	2020 -->	
Kia*	Sportage	2020	2022
Kia*	Stonic	2020 -->	
Kia*	Picanto	2020 -->	

Copyright by Silca S.p.A. 2023 - All Rights Reserved

SILCA NEWS
AUTOMOTIVE SOLUTIONS
2023
NR. 05

Mercedes* All Keys Lost Cable Kit
ADC2600 - Code D756298AD

The ‘plug and play’ solution to programme new slot keys for popular Mercedes* models in an all keys lost situation

La soluzione “plug and play” per programmare nuove Slot Key per vari modelli Mercedes* popolari quando tutte le chiavi sono perse.

Die “Plug and Play”-Lösung zum Programmieren neuer Slot-Schlüssel für verschiedene beliebte Mercedes*-Modelle in einer Situation, in der alle Schlüssel verloren gegangen sind.

La solution « plug and play » pour programmer de nouvelles clés slot pour divers modèles Mercedes* populaires dans une situation où toutes les clés sont perdues.

A solução ‘plug and play’ para programar novas chaves para modelos Mercedes* populares quando todas as chaves são perdidas.

La solución “plug and play” para programar llaves nuevas para varios modelos populares de Mercedes* cuando se pierden todas las llaves originales.

Kit Contents

ADA2600

EIS Removal tool

ADC2601

ADC2602

ADC2603

ADC2604

EIS Connection cables

ADC2609

12V Power cable

What else is needed?

Smart Pro

ADS2298 Programming Software

ADC260 Mercedes Smart Programmer

Silca slot key HU106S23**

Refer to MYKEYS Pro for the full, updated application list

mykeyspro.com

**In Germany please order code HU106AS23

(*) This trademark belongs to third parties not affiliated or connected to Silca S.p.A. or the dormakaba Group. Silca S.p.A. and the dormakaba Group do not possess any intellectual property rights regarding the trademark and have not obtained any licences under it; it is used merely to indicate the destination of use for Silca products.

Copyright by Silca S.p.A. 2023 - All Rights Reserved

SILCA NEWS
AUTOMOTIVE SOLUTIONS
2023
NR. 05

Key programming software update compatible with Mercedes* ADS2298 - Code D755338AD

Now programmes Mercedes* slot keys without need of a working key

Advanced Diagnostics ha sviluppato un aggiornamento al software ADS2298 per programmare chiavi Silca compatibili con i modelli Mercedes* anche senza una chiave funzionante.

Advanced Diagnostics freut sich, ein Update der Software ADS2298 Mercedes* ankündigen zu können, mit dem neue Schlüssel auch ohne funktionierenden Schlüssel programmiert werden können.

Advanced Diagnostics a le plaisir d'annoncer une mise à jour du logiciel ADS2298 Mercedes* permettant de programmer de nouvelles clés même en l'absence d'une clé fonctionnelle.

A Advanced Diagnostics desenvolveu a atualização do software ADS2298 para a programação de chaves de slot Mercedes* mesmo em situações em que todas as chaves são perdidas.

Advanced Diagnostics se complace en anunciarles el lanzamiento de una actualización para el software ADS2298 de Mercedes*. La nueva actualización permite programar llaves en caso de perdida total.

What else is needed?

Smart Pro

Smart Programmer ADC260

Slot key HU106S23**

MY

Refer to MYKEYS Pro for the full, updated application list

mykeyspro.com

Cable kit ADC2600 (if no working key available)

OFFER DETAILS	
Cable	**ADC2000**
Other accessories required	**Smart Programmer ADC260** **Cable kit ADC2600 (if no working key available)**
Other software required	**No**

**In Germany please order code HU106AS23

(*) This trademark belongs to third parties not affiliated or connected to Silca S.p.A. or the dormakaba Group. Silca S.p.A. and the dormakaba Group do not possess any intellectual property rights regarding the trademark and have not obtained any licences under it; it is used merely to indicate the destination of use for Silca products.

Copyright by Silca S.p.A. 2023 - All Rights Reserved

SILCA NEWS
AUTOMOTIVE SOLUTIONS
2023
NR. 05

All Keys lost cable suitable for Toyota*
ADC2016 - Code D755976AD

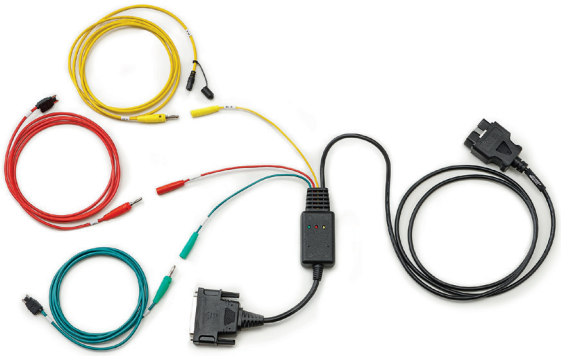

Enables programming of replacement Toyota* ‘H’ bladed keys even in an all keys lost situation

Consente di programmare le chiavi con canna metallica tipo ‘H’ Toyota* anche in assenza totale di chiavi.

Ermöglicht die Programmierung von Toyota*, H-Metallschlüsseln, auch wenn alle Schlüssel verloren gegangen sind.

Permet de programmer des clés de remplacement en métal type ‘H’ Toyota* même en cas de perte totale de toutes les clés.

Permite a programação de substituição de chaves de tipo lâmina Toyota* ‘H’, mesmo em caso de perda de todas as chaves.

Permite la programacion de llaves con espadin tipo ‘H’ para Toyota*, incluso en situacion de perdida total de llaves.

What else is needed?

Smart Pro

ADC2015 Emulator cable

ADS2328 Programming Software

Applications

MAKE *	MODEL	FROM	TO	KEY TYPE	KEY REF.
Citroën*	C1	2014	2019	Bladed	MYKEYS Pro
Peugeot*	108	2014	2019	Bladed	MYKEYS Pro
Toyota*	Aygo	2014	2019	Bladed	MYKEYS Pro
Toyota*	C-HR	2016	2019	Bladed	MYKEYS Pro
Toyota*	Camry	2012	2018	Bladed	MYKEYS Pro
Toyota*	Corolla	2010	2018	Bladed	MYKEYS Pro
Toyota*	Corolla (hatch)	2009	2018	Bladed	MYKEYS Pro
Toyota*	Hiace	2009	2018	Bladed	MYKEYS Pro
Toyota*	Hilux	2009	2020	Bladed	MYKEYS Pro
Toyota*	Kluger	2010	2019	Bladed	MYKEYS Pro
Toyota*	Land Cruiser (model VDJ79)	2016	2023	Bladed	MYKEYS Pro
Toyota*	RAV4	2008	2018	Bladed	MYKEYS Pro
Toyota*	Yaris	2012	2020	Bladed	MYKEYS Pro

> More info at mykeyspro.com

(*) This trademark belongs to third parties not affiliated or connected to Silca S.p.A. or the dormakaba Group. Silca S.p.A. and the dormakaba Group do not possess any intellectual property rights regarding the trademark and have not obtained any licences under it; it is used merely to indicate the destination of use for Silca products.

Copyright by Silca S.p.A. 2023 - All Rights Reserved

SILCA NEWS
AUTOMOTIVE SOLUTIONS
2023
NR. 05

Key programming software update compatible with Toyota* ADS2328 - Code D756605AD

Now programmes both proximity AND bladed keys via OBD for a wide range of popular Toyota* and Lexus* models even in an all keys lost situation

Il software programma tutte le tipologie di chiavi, prossimità e con canna metallica per un'ampia gamma di popolari modelli Toyota* e Lexus* tramite cavo l'OBD.

Programmiert Keyless-Go-Schlüssel und auch Metallschlüsseln für Toyota* und Lexus* über das OBD, selbst in einer Situation, in der alle Schlüssel verloren gehen.

Le logiciel programme les clés de proximité et les clés en métal pour une sélection de modèles populaires de Toyota* e Lexus* via OBD même dans une situation où toutes les clés sont perdues.

Programa chaves de proximidade e chaves de metal para Toyota* e Lexus* por meio do OBD, mesmo em uma situação de perda de todas as chaves.

Programe llaves de proximidad y llaves con espadin para Toyota* y Lexus* a través de OBD incluso en situaciones de pérdida de todas las llaves.

What else is needed?

Smart Pro

Emulator ADC2015 (if no working key available)

For Silca key check MYKEYS Pro

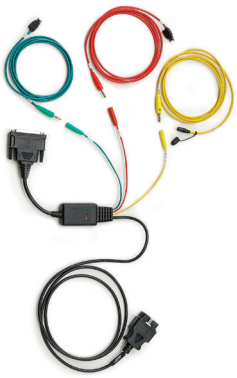

All keys lost cable ADC2016 (for bladed keys if no working key available)

MY

Refer to MYKEYS Pro for the full, updated application list

mykeyspro.com

OFFER DETAILS	Using tokens	Using UTP	Using purchased software
Cable	ADC2000	ADC2000	ADC2000
Software category	A	A	A
Smart Aerial required	No	No	No
Server connection & key programming	1 token (some procedures require 3 tokens)	Included	Included

(*) This trademark belongs to third parties not affiliated or connected to Silca S.p.A. or the dormakaba Group. Silca S.p.A. and the dormakaba Group do not possess any intellectual property rights regarding the trademark and have not obtained any licences under it; it is used merely to indicate the destination of use for Silca products.

Copyright by Silca S.p.A. 2023 - All Rights Reserved

IMPORTANT

In compliance with current regulations relating to industrial property, please note that - but for “Silca”, “dormakaba”, “Kaba”, “Ilco” and “Advanced Diagnostics” - the trademarks or trade names mentioned in our document are the exclusive property of third parties not affiliated nor linked with Silca S.p.A. or the dormakaba Group. Silca S.p.A. and dormakaba Group do not own any intellectual property right nor have been granted any license with regard to such trademarks and trade names, which are hereby used only to indicate the intended purpose of Silca’s products. / This catalogue is reserved exclusively for professional key cutters who use Silca products. The illustrations and technical data regarding the products in the document are to be considered indicative. Silca reserves the right to alter products designs, dimensions or info to improve the products quality. The contents of this document are fully protected by Copyright and may not be copied or reproduced in any form, without written permission from Silca S.p.A. Any controversy shall be settled by the Courts where the company Silca S.p.A. has its headquarters, with express exclusion of any other court.

WICHTIG

In Übereinstimmung mit den geltenden Bestimmungen zum gewerblichen Eigentum weisen wir darauf hin, dass – mit Ausnahme von “Silca“, “dormakaba“, “Kaba“, “Ilco“ und “Advanced Diagnostics“ – die in unserem Dokument erwähnten Markenzeichen oder Handelsnamen das ausschließliche Eigentum Dritter sind, die weder der Silca S.p.A. noch der dormakaba Gruppe angehören oder mit diesen verbunden sind. Diese Markenzeichen oder Handelsbezeichnungen werden hier nur erwähnt, um auf die bestimmungsgemäße Verwendung der Silca-Produkte hinzuweisen. / Dieser Katalog ist ausschließlich professionellen Schlüsseldiensten vorbehalten, die Silca-Produkte verwenden. Die in diesem Dokument enthaltenen Abbildungen und technischen Daten der Produkte sind als Richtwerte zu betrachten. Silca behält sich vor, etwaige Änderungen, die zur Verbesserung des Produktes beitragen, vorzunehmen. Alle Zeichnungen und Fotos sind Eigentum der Firma Silca. Jede Reproduktion, auch teilweise, ist ohne ausdrückliche Genehmigung der Silca S.p.A. gesetzlich untersagt. Im Falle von Streitfragen ist der Gerichtsstand des Firmensitzes Silca S.p.A. zuständig; jeder andere Gerichtsstand ist ausgeschlossen.

IMPORTANTE

En cumplimiento de la normativa vigente en materia de propiedad industrial, se recuerda que, salvo para “Silca”, “dormakaba”, “Kaba”, “Ilco” y “Advanced Diagnostics”, las marcas y los nombres comerciales citados en nuestro documento son propiedad exclusiva de terceras sociedades, no afiliadas ni asociadas con Silca S.p.A. o el Gruppo dormakaba. Dichas marcas o denominaciones comerciales se citan aquí solamente para indicar el empleo de destino de los productos Silca. / Este catálogo queda reservado exclusivamente a los duplicadores profesionales, que utilizan los productos Silca. Las ilustraciones y los datos técnicos de los productos contenidos en el documento se han de considerar indicativos. Silca se reserva el derecho, quedando invariables las características principales de los productos, de modificar todo lo que considere necesario y oportuno para mejorar la calidad de sus artículos. Todos los dibujos y fotografías pertenecen a Silca; según determina la Ley, se prohibe toda reproducción, total o parcial, sin autorización por escrito de Silca S.p.A. En caso de disconformidad, la competencia es de las autoridades judiciales donde esté domiciliada la firma Silca S.p.A. excluyendo cualquier otro Tribunal.

IMPORTANTE

In ottemperanza alla normativa vigente in materia di proprietà industriale, si ricorda che - fatta eccezione per “Silca”, “dormakaba”, “Kaba”, “Ilco” e “Advanced Diagnostics” - i marchi o i nomi commerciali citati nel nostro documento sono di esclusiva proprietà di terzi, non affiliati né collegati a Silca S.p.A. o al Gruppo dormakaba. Silca S.p.A. e il Gruppo dormakaba non possiedono alcun diritto di proprietà intellettuale nè agli stessi è stata concessa alcuna licenza in relazione a detti marchi o denominazioni commerciali, i quali sono qui citati solo per indicare la destinazione d'uso dei prodotti Silca. / Questo catalogo è riservato esclusivamente ai duplicatori professionisti che utilizzano i prodotti Silca. Le illustrazioni e i dati tecnici dei prodotti contenuti nel documento debbono considerarsi indicativi. Silca si riserva il diritto, ferme restando le caratteristiche essenziali dei prodotti, di apportare tutte le modifiche che ritiene necessarie e opportune al fine di migliorare la qualità dei prodotti. Tutti i disegni e le fotografie sono di proprietà di Silca, ogni riproduzione anche parziale, senza autorizzazione scritta di Silca S.p.A. è vietata secondo termini di legge. Per qualsiasi controversia competenti sono gli Uffici Giudiziari dove ha sede l’Azienda Silca S.p.A., con espressa esclusione di qualsiasi altro foro.

IMPORTANT

Conformément à la législation en vigueur en matière de propriété industrielle, il est rappelé que - à l’exception de "Silca", "dormakaba", "Kaba", "Ilco" et "Advanced Diagnostics" - les marques ou noms commerciaux mentionnés dans notre document sont la propriété exclusive de tiers, non affiliés, ni liés à Silca S.p.A. ou au Groupe dormakaba. Ces marques ou dénominations commerciales ne sont mentionnées ici que pour indiquer la destination des produits Silca. / Ce catalogue est exclusivement réservé aux reproducteurs professionnels qui utilisent les produits Silca. Les illustrations et les données techniques des produits contenues dans le document doivent être considérées comme indicatives. Bien que les caractéristiques essentielles des produits soient invariables, Silca se réserve le droit d’apporter toutes les modifications qu’elle retiendra nécessaires et opportunes afin d’améliorer la qualité de ses produits. Tous les dessins et photos sont propriété Silca et toute reproduction, même partielle, sans l’autorisation écrite préalable de Silca S.p.A. est interdite conformément aux prescriptions légales. Tout litige est du ressort exclusif des Tribunaux de la circonscription où se trouve le Siége de la Société Silca S.p.A.

IMPORTANTE

No respeito das normas em vigor relativas à propriedade industrial, lembra-se que - exceptuando “Silca”, “dormakaba”, “Kaba”, “Ilco” e “Advanced Diagnostics” – as marcas ou os nomes comerciais citados no nosso documento são propriedade exclusiva de terceiros, não associados nem ligados à Silca S.p.A. ou ao Grupo dormakaba. Essas marcas ou denominações comerciais são citadas aqui somente para indicar o uso pretendido dos produtos Silca. / Este catálogo é reservado exclusivamente aos profissionais da duplicação que utilizam os produtos Silca. As figuras e as características técnicas dos produtos contidas no documento são facultadas a título indicativo. Mesmo que as caracteristicas essencias dos produtos sejam invariáveis, à Silca reserva-se o direito de modificar ser nescessário e oportuno los productos, afim de melhorar a sua qualidade. Todos os desenhos e fotos são propriedade da Silca, e é proibida a sua reprodução mesmo parcial sem a autorização escrita da Silca S.p.A. conforme as prescrições legais. Em caso de litígio fica desde já designado, excluindo qualquer outro, o Tribunal da comarca onde está registrada a sede da Silca S.p.A.

Copyright by Silca S.p.A. 2023 - All Rights Reserved